No, PG-CO201005

PRODUCT GUIDE

Rubber-Lining Slurry Pump

CROVER PUMP

High sealing performance and maintainability

Contribution to reducing environmental burdens and CO_2 emissions

Since 1954

MITSUWA PUMP CO.,LTD.

CROVER PUMP

COR

CROSS OVER PUMP

series

Centri-Fugal Rubber Pump

Rubber Lining Slurry Pump

Has achieved high wear and corrosion resistance!

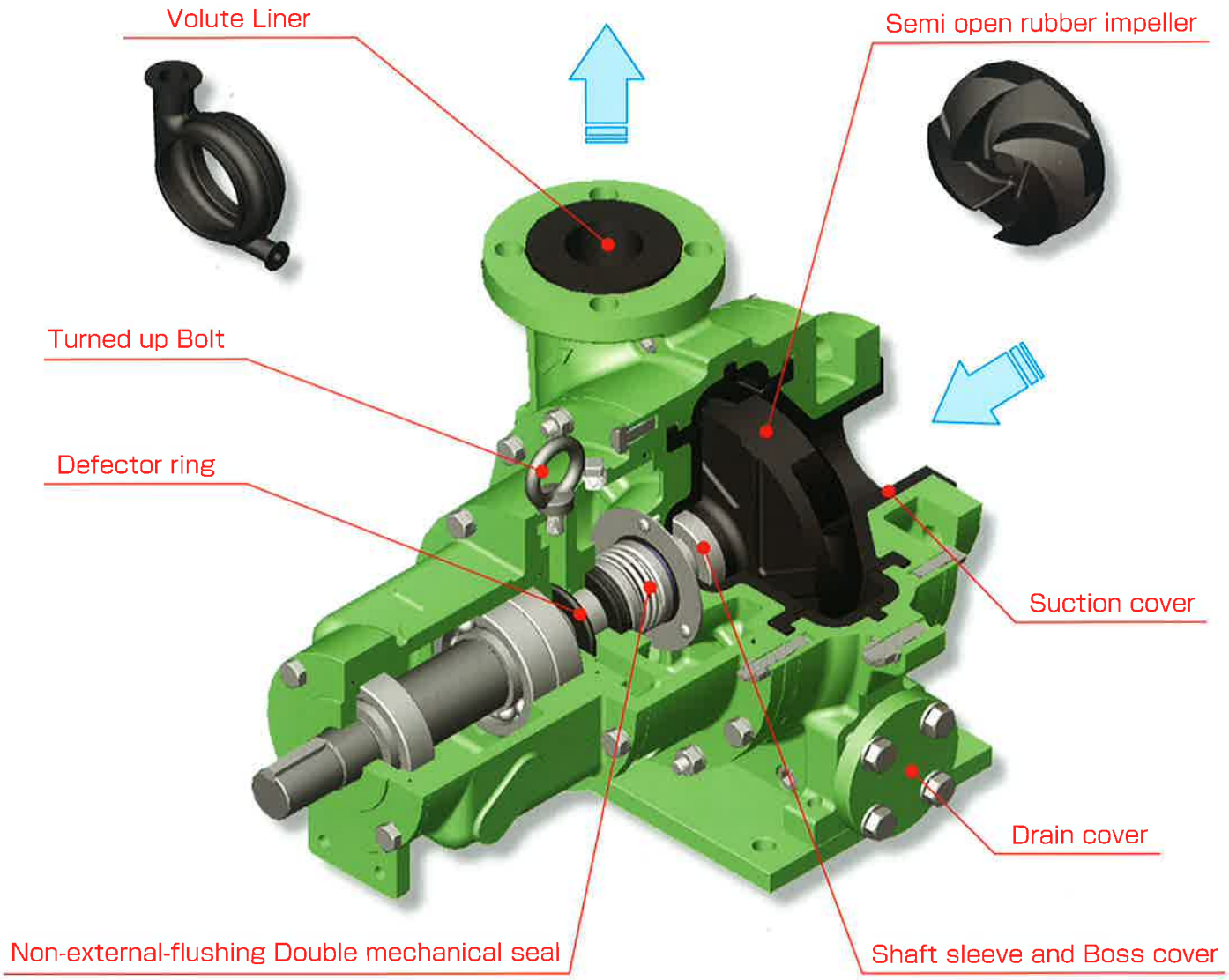

Major applications

- For draining water
- For pumping out liquid from flue gas desulfurizers and scribers and circulating it through the equipment
- For pumping out slurry such as abrasive and raw material for ceramic
- For pumping out chemical slurry
- For pumping out water that contains a high concentration of salt such as seawater

■Model code■

2 COR - N S B

- **B** — material of rubber parts for mechanical seal
  - B = nitrile butadiene rubber (NBR)
  - F = FKM
- **S** — material of Sleeve
  - S = SUS316
  - H = hastelloy C276
- **N** — N=Meterial Rubber
  - N = natural rubber (NR)
  - B = nitrile butadiene rubber (NBR)
  - I = Isobutylene-isoprene rubber (IIR)
- **COR** — Pump series
- **2** — Delivery bore

■Cross section■

2COR TYPE

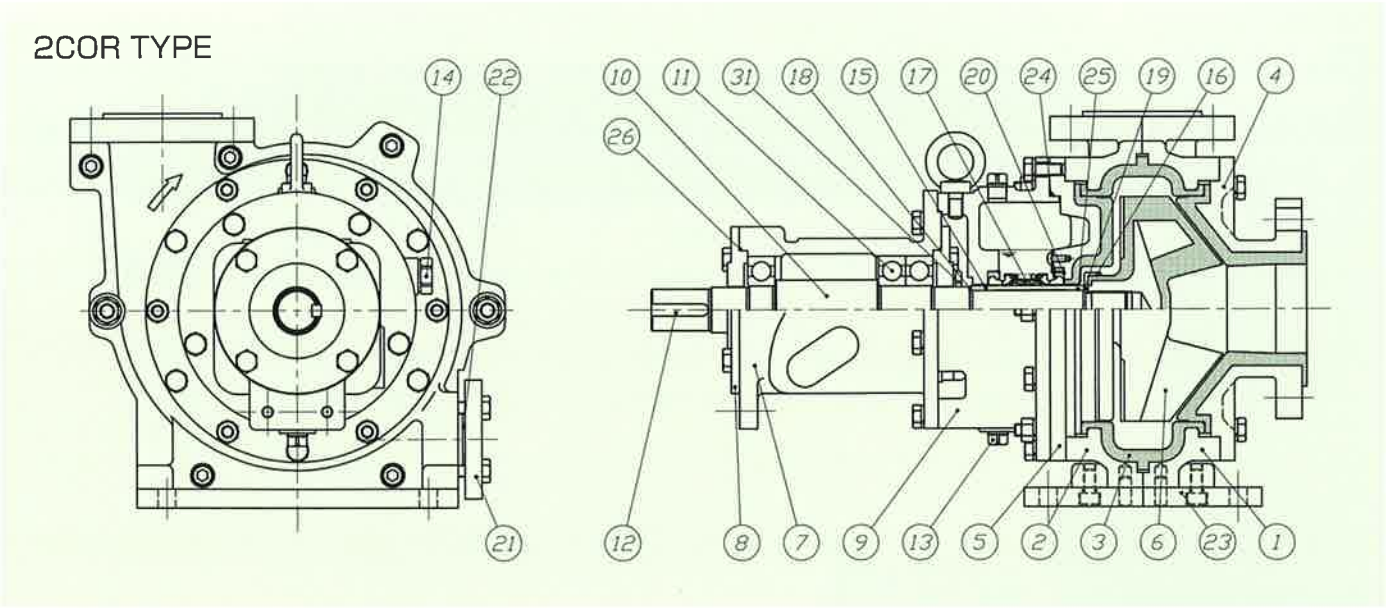

No.	Article	Qty.	No.	Article	Qty.	No.	Article	Qty.
1	Casing(on the suction side)	1	12	Key	1	23	Base plate	1
2	Casing(on the seal side)	1	13	Oil feed/drain plug	2	24	O ring	1
3	Volute liner	1	14	Sight glass	1	25	O ring	1
4	Suction cover	1	15	Shaft sleeve	1	26	O ring	2
5	Casing cover	1	16	Boss cover	1	27		
6	Impeller	1	17	Double mechanical seal	1	28		
7	Bearing case	1	18	Seal washer	1	29		
8	Bearing case cover	2	19	Seal washer	1	30		
9	Sear case	1	20	Seal washer	1	31	Deflector ring	1
10	Shaft	1	21	Drain cover	1	32		
11	Ball bearing	3	22	Drain cover gasket	1	33		

■Standard Specification■

Model		centrifugal slurry pump
Bore (mm)		80 × 50
Capacity (㎥/min)		0.2 ~ 1.0
Total Head (m)		5 ~ 40
Flange		JIS10kg/cm²
Constraction	Impeller	Semi open
	Gland	Double mechanical seal
	Seal	oil (non-flushing water)
	Bearing	shield type radial ball bearing
Driven		V belt
Setting		Indoor / outdoor

Material	Volute liner	Rubber (NR/NBR/IIR)
	Suction cover	FC+Rubber Lining (NR/NBR/IIR)
	Casing cover	FC+Rubber Lining (NR/NBR/IIR)
	Impeller	AC+Rubber Lining (NR/NBR/IIR)
	Shaft	SUS420J2
	Sleeve	SUS316 / hastelloy C276
	Mechanical seal	SiC×SiC (NBR / FKM)
Standard Accessory		Base · Belt cover V pulley · V Belt
Electric	Phase	Three phase
	Volt	200V / 400V / 380V

■Selection chart■

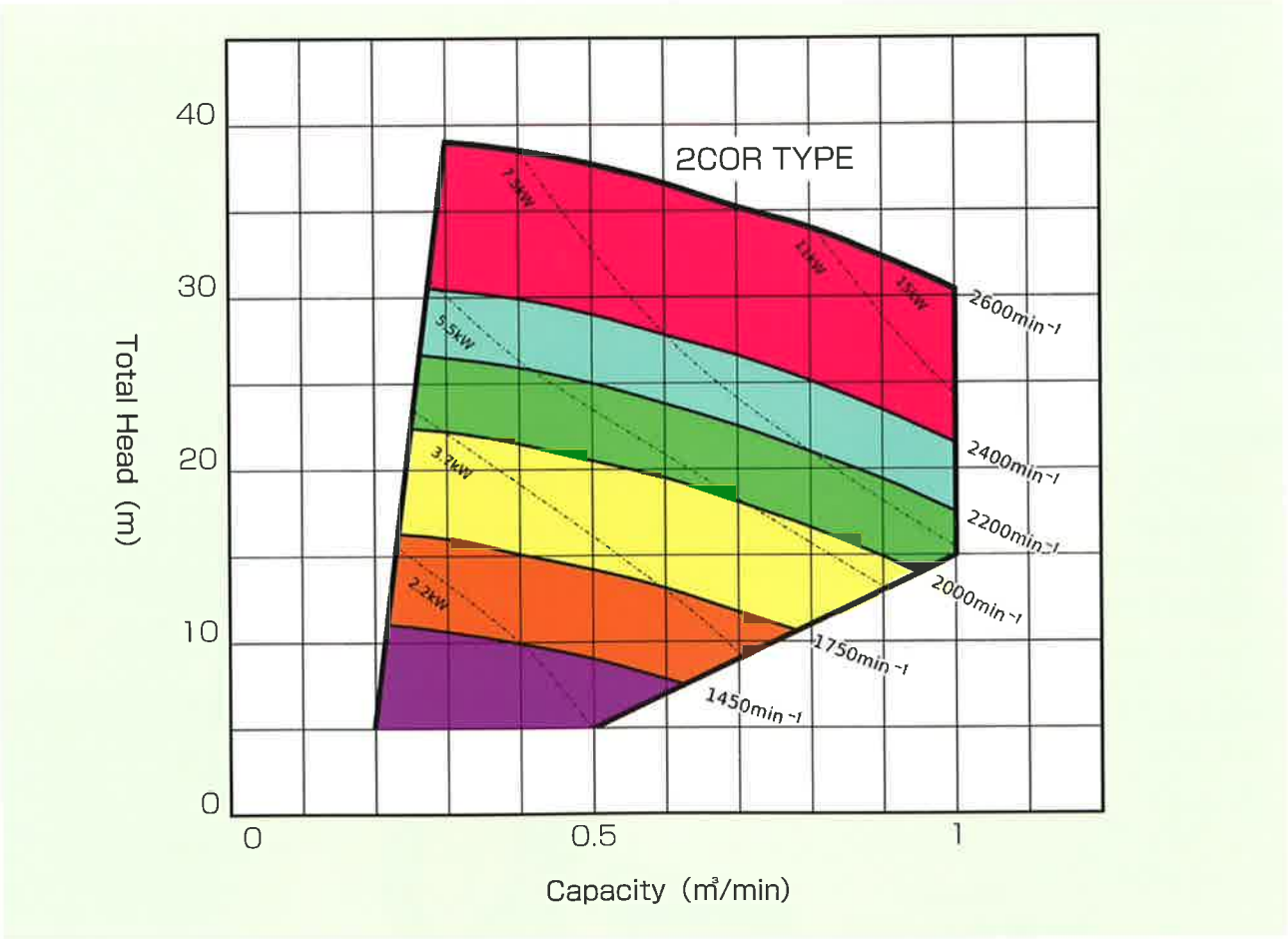

Bore mm	Speed rpm min⁻¹	motor kW	Capacity ㎥/min	Total Head m	Capacity ㎥/min	Total Head m
80×50	1450	2.2 ~ 3.7	0.25	10	0.5	9
80×50	1750	3.7 ~ 5.5	0.3	16	0.6	13
80×50	2000	5.5 ~ 7.5	0.35	22	0.7	18
80×50	2200	7.5 ~ 11	0.4	25	0.8	21
80×50	2400	7.5 ~ 11	0.4	29	0.8	25
80×50	2600	11 ~ 15	0.4	38	0.8	34

Features

ECO

• Combination of rubber and metal linings on the wetted surface of the pump.

- Wear- and corrosion-resistant rubber lining ideal for pumping out various kinds of liquid
- High durability owing to a cylindrical one-piece volute liner
- Suction and casing covers lined with rubber and metal

ECO

• The pump comes equipped with a non-external-flushing double mechanical seal (oil-sealed) as standard.

- The use of a double mechanical seal on the shaft seal, which is the main part of the centrifugal pump, prevents liquid leaks from the shaft seal.
- In principle, no water needs to be injected into the shaft seal, resulting in reduced running costs and no extra wastewater.

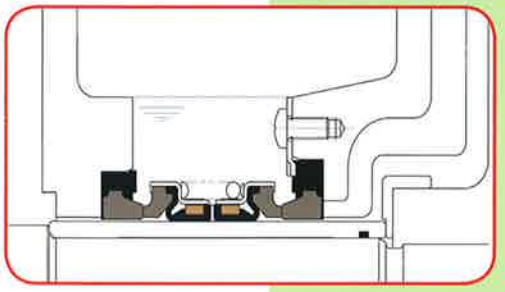

＊When the water temperature is higher than 70℃ or the slurry particle size is less than 10μm, we recommend external flushing. In this case, please contact us.

ECO

• Good maintainability owing to the use of the back pullout system.

Rotating parts (such as a mechanical seal and an impeller) can be replaced without removing the pipes.
Also, the double mechanical seal can be assembled with ease.

ECO

• Slurry pump that has achieved high efficiency.

Although this product is a type of slurry pump, it has achieved a maximum efficiency of 50% owing to the excellent combination of a semi-open impeller and a volute liner.Also, the product helps reduce CO_2.

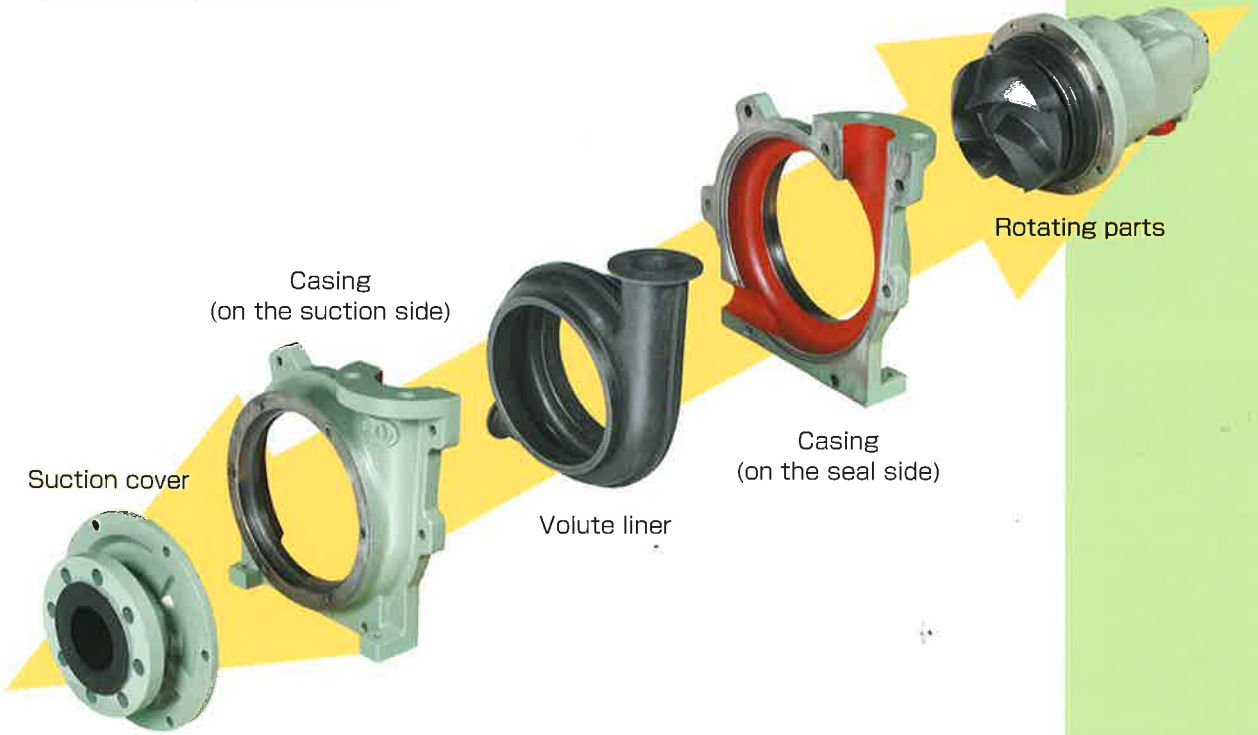

■Out of Views■

2COR TYPE

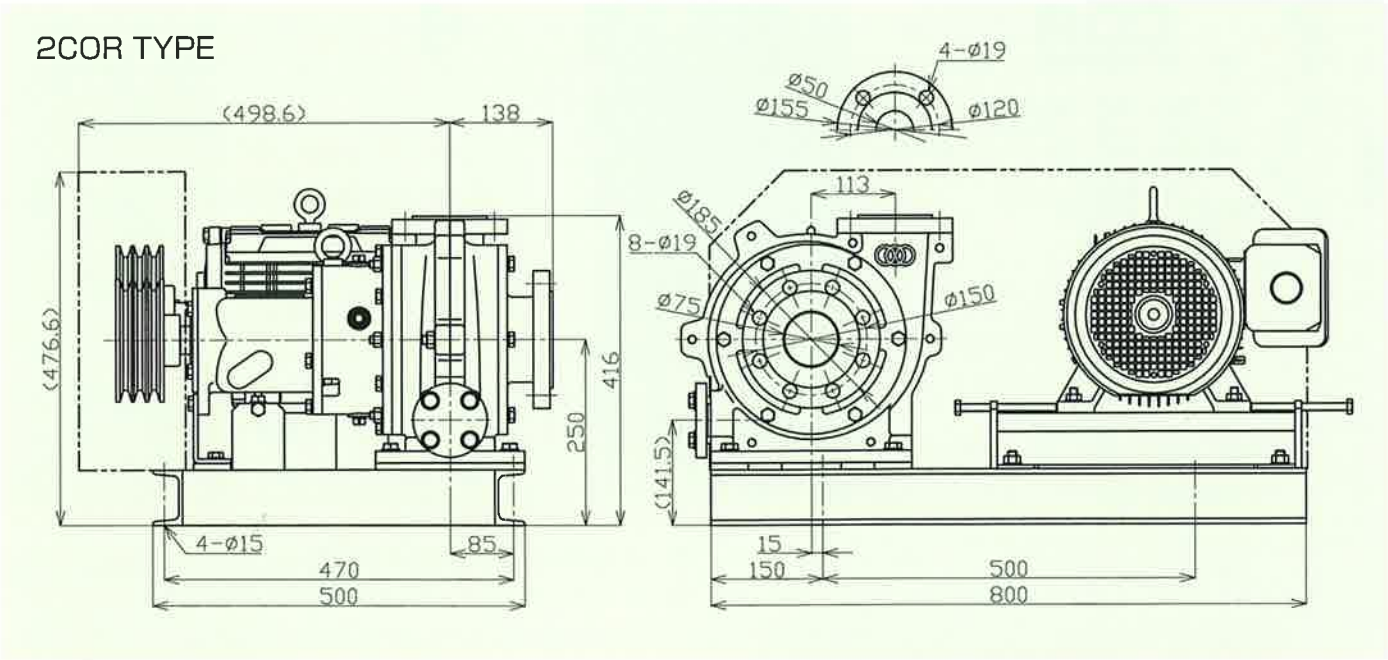

【About Weight】 (kg)

Power / Type	2.2kW-4P	3.7kW-4P	5.5kW-4P	7.5kW-4P	11kW-4P	15kW-4P
2COR	165	170	185	190	220	240

PUMP

＊Contents in this catalogue are subject to change without notice

MITSUWA PUMP CO.,LTD.

3617 Shinkurahara, Ooaza-Yamada, Touincho, Mie-Prefecture, Japan;511-0251
TEL 0594-76-1100 FAX 0594-76-1101
URL http://www.mitsuwapump.jp/ E-mail m-k@mitsuwapump.jp